ONE LAMP RAPID START BALLAST

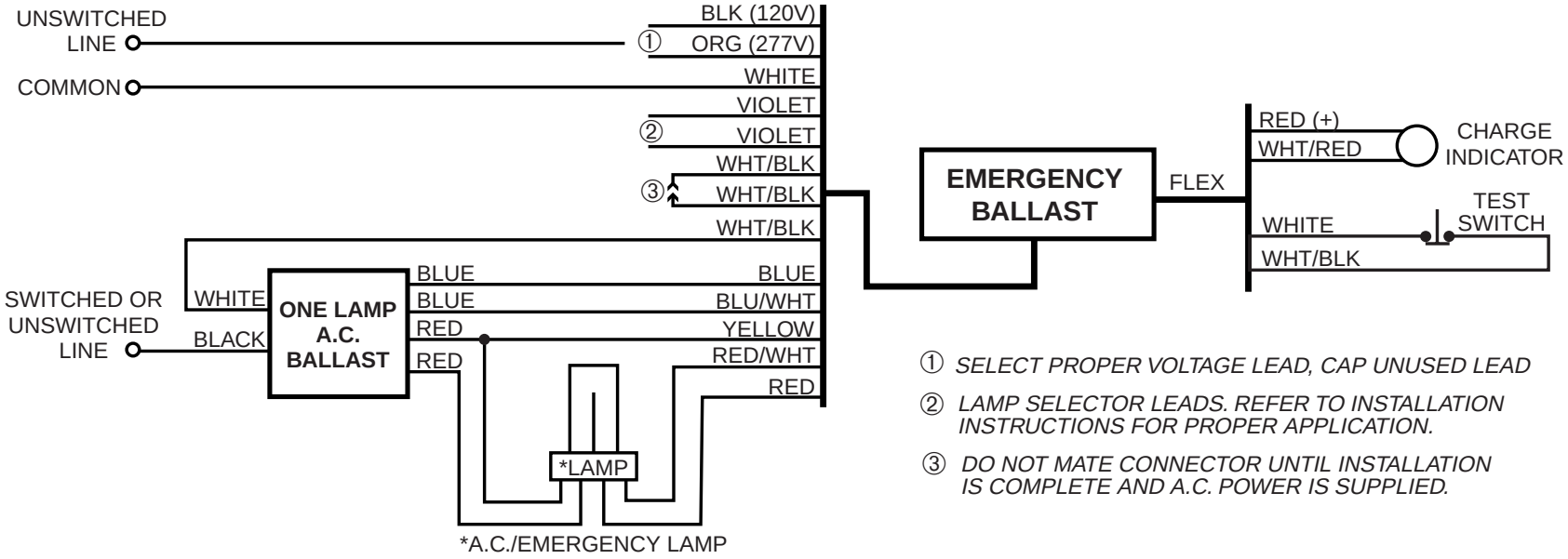

① *SELECT PROPER VOLTAGE LEAD, CAP UNUSED LEAD*

② *LAMP SELECTOR LEADS. REFER TO INSTALLATION INSTRUCTIONS FOR PROPER APPLICATION.*

③ *DO NOT MATE CONNECTOR UNTIL INSTALLATION IS COMPLETE AND A.C. POWER IS SUPPLIED.*

PHONE (520)-294-3292 FAX (520) 741-2837 WEB http://www.iotaengineering.com

IOTA ENGINEERING CO.